MOD. MA

DESCRIZIONE-*DESCRIPTION*	*COD.*
1 Corpo - Body	B-SA3400-GR
2 Fondello - End cap	B-XFS0029
3 Pistone-Piston (3-4-5 inclusi-encluded)	B-XP10001
4 O-Ring 13,95x2,62 (3056)	B-OR0009
5 O-Ring 2,9x1,78 (2012)	B-OR0008
6 Testina C.-Complete H.(12+13+14+15+16)	B-XTC0...
7 Rilsan Ø 4	B-TUB0013
8 Vite fondello - End cap screw M3x12	B-VIT0066
9 Vite reg. liquido - Liq.setting screw	B-XVR0003
10 Rond.rame-Copper washer (14x10x1)	B-RON0004
11 Kit O-Rings	B-XKI0022
12 O-Ring 13,1x2,62 (117)	B-OR0002
13 O-Ring 8,73x1,78 (108)	B-OR0003
14 Porta Jet (Nipplo)-Nozzle soached	B-XPJ0003
15 Jet	B-XJE.....
16 Ghiera porta Jet - Jet cap nut	B-GHI0002
17 O-Ring 18,77x1,78 (2075)	B-OR0028
18 O-Ring 4,47x1,78 (2018)	B-OR0004
19 O-Ring 6,75x1,78 (106)	B-OR0016
20 O-Ring 3,68x1,78 (2015) (x3)	B-OR0013
21 O-Ring 11,11x1,78 (114)	B-OR0017
22 O-Ring 1,78x1,78 (2007) **90 SHORE A**	B-OR0017
23 Spina Elastica - Roll Pin 10x3	B-SPE0002

EXT. MIX (JET MX4)
Pressioni-Pressures
AIR LIQ. indipendent setting
Liq. 0,5 - 1 bar
AIR 4-8 Bar
(PIL. 4-8 bar)

EXTERNAL MIXING

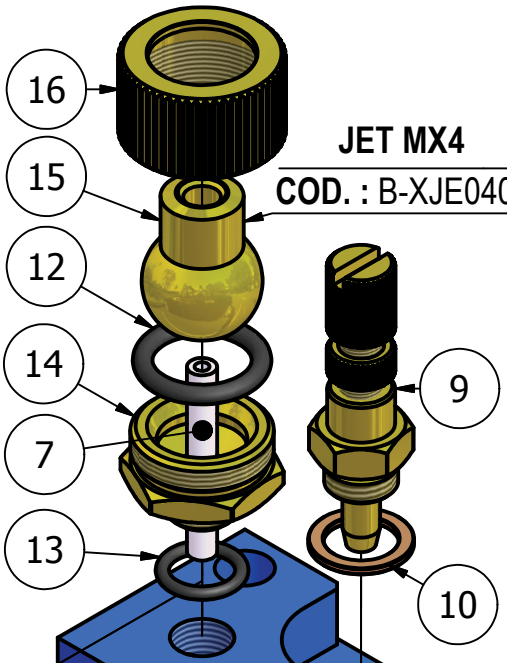

JET MX4
COD. : B-XJE0402

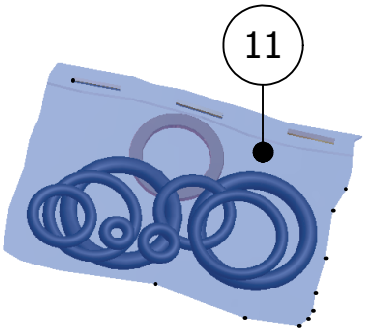

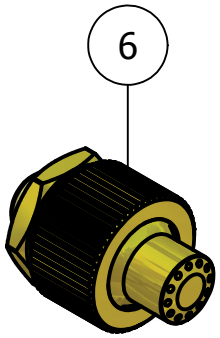

INTERNAL MIXING

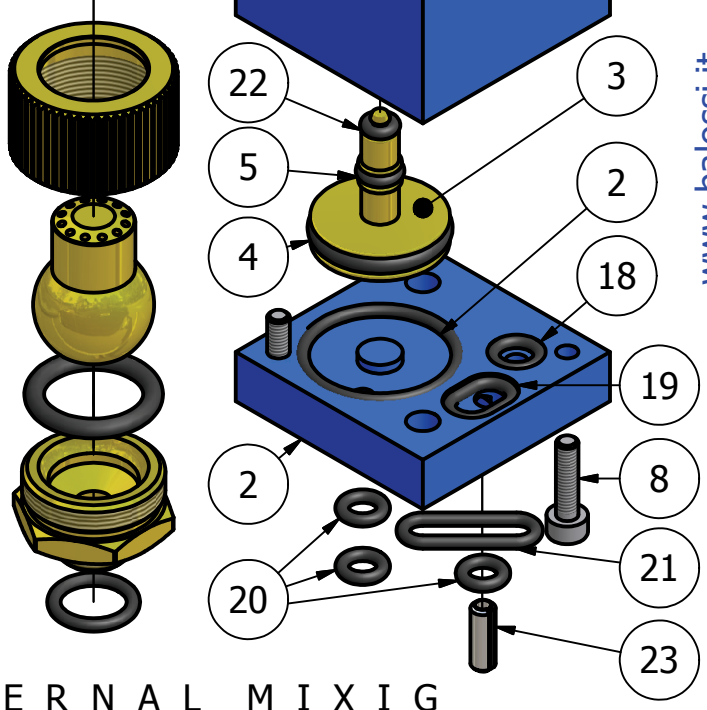

INTERN. MIX
Esempi Pressioni di utilizzo:
Working Pressures examples:
Liq. 4 bar - Air 5 bar
Liq. 5 bar - Air 6 bar
Liq. 6 bar - Air 7 bar
Liq. 7 bar - Air 8 bar
(PIL. 4-8 bar)

J E T S I N T E R N A L M I X I G

	"P" 12/30°	"P" 12/60°	"P" 12-60/90°	"V" 1	"M" 4	"M" 2,5
COD. :	B-XJE0301	B-XJE0302	B-XJE0303	B-XJE0201	B-XJE0103	B-XJE0101

Balossi s.r.l. 25017 LONATO Bs Italy - tel.&Fax +39-030-9133007-9133017

www.balossi.it - balossisrl@numerica.it