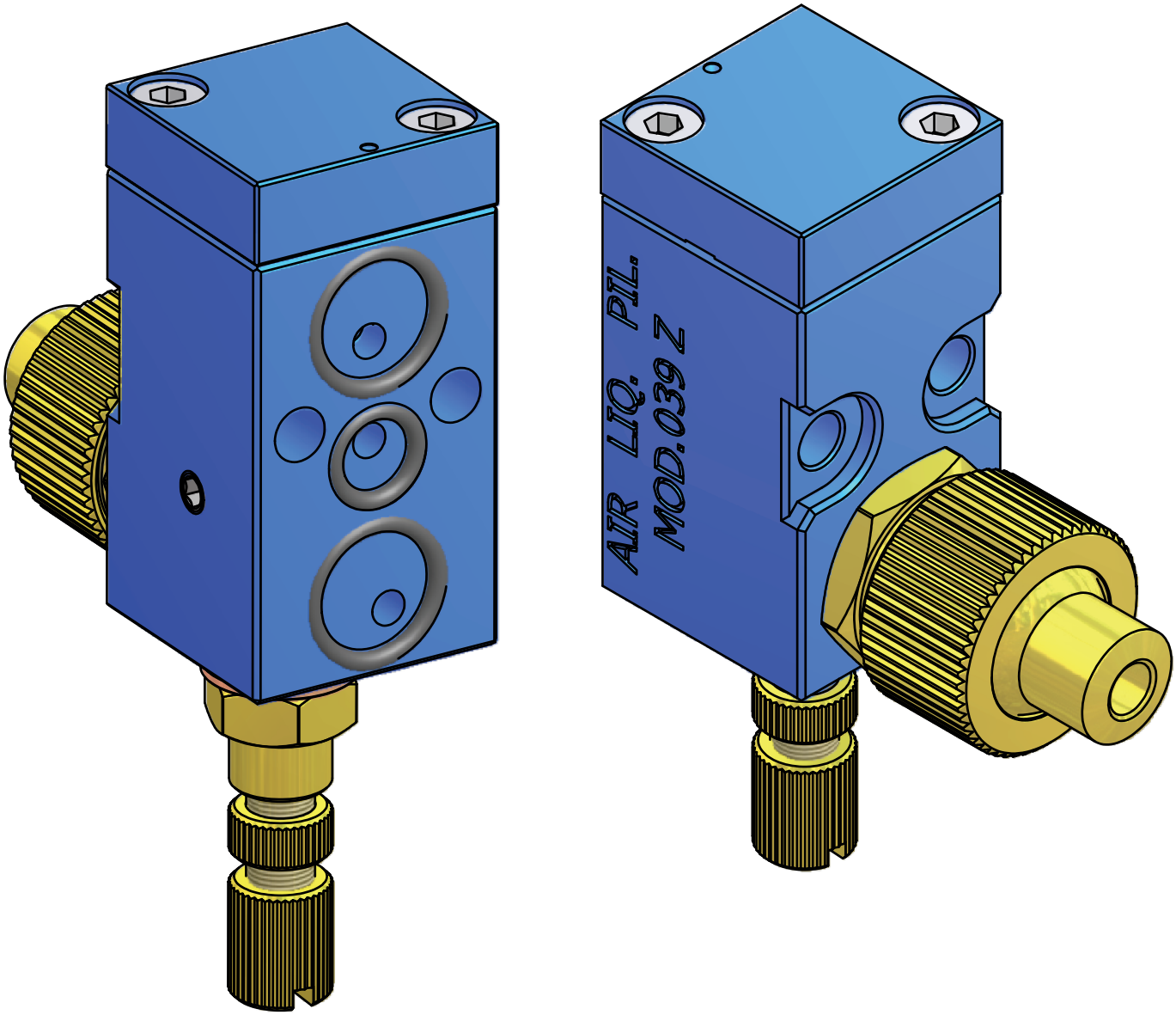
AIR LIQ. PIL.
MOD.039 Z

MOD. 039 Z

DESCRIZIONE *DESCRIPTION*	COD.
1 Corpo - Body	B-SA1500-GR
2 Fondello - End cap	B-XFS0011
3 Pistone - Piston (4-5-19-inclusi-encluded)	B-XPI0001
4 O-Ring 13,95x2,62 (3056)	B-OR0009
5 O-Ring 2,9x1,78 (2012)	B-OR0008
6 Testina comp.-Complete H.(12+13+14+15+16+20)	B-XTC....
7 Molla - Spring	B-MOL0003
8 Vite fondello - End cap screw M4x12 (x2)	B-VIT0030
9 Vite reg. liquido - Liqid setting screw	B-XVR0003
10 Rondella rame - Copper washer (14x10x1)	B-RON0004
11 Kit O-Rings	B-XKI0006
12 O-Ring 13,1x2,62 (117)	B-OR0002
13 O-Ring 8,73x1,78 (108)	B-OR0003
14 Porta Jet (Nipplo) - Nozzle soached	B-XPJ0003
15 Jet MX 4 (external mixing)	B-XJE0402
16 Ghiera porta Jet - Jet cap nut	B-GHI0002
17 O-Ring 6,75x1,78 (106)	B-OR0016
18 O-Ring 10,82x1,78 (2043) (x2)	B-OR0011
19 O-Ring 1,78x1,78 (2007) **90 SHOREA**	B-OR0001
20 Tubo Rilsan - Rilsan Pipe	B-TUB0013

Sostituire ogni 3 - 6 mesi
Replace every 3 - 6 month

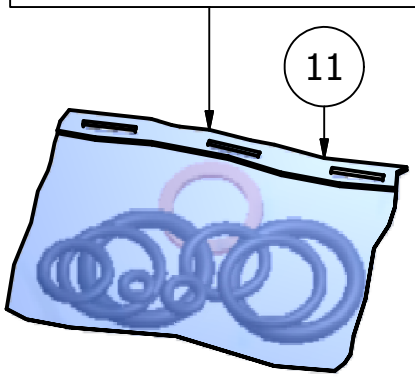

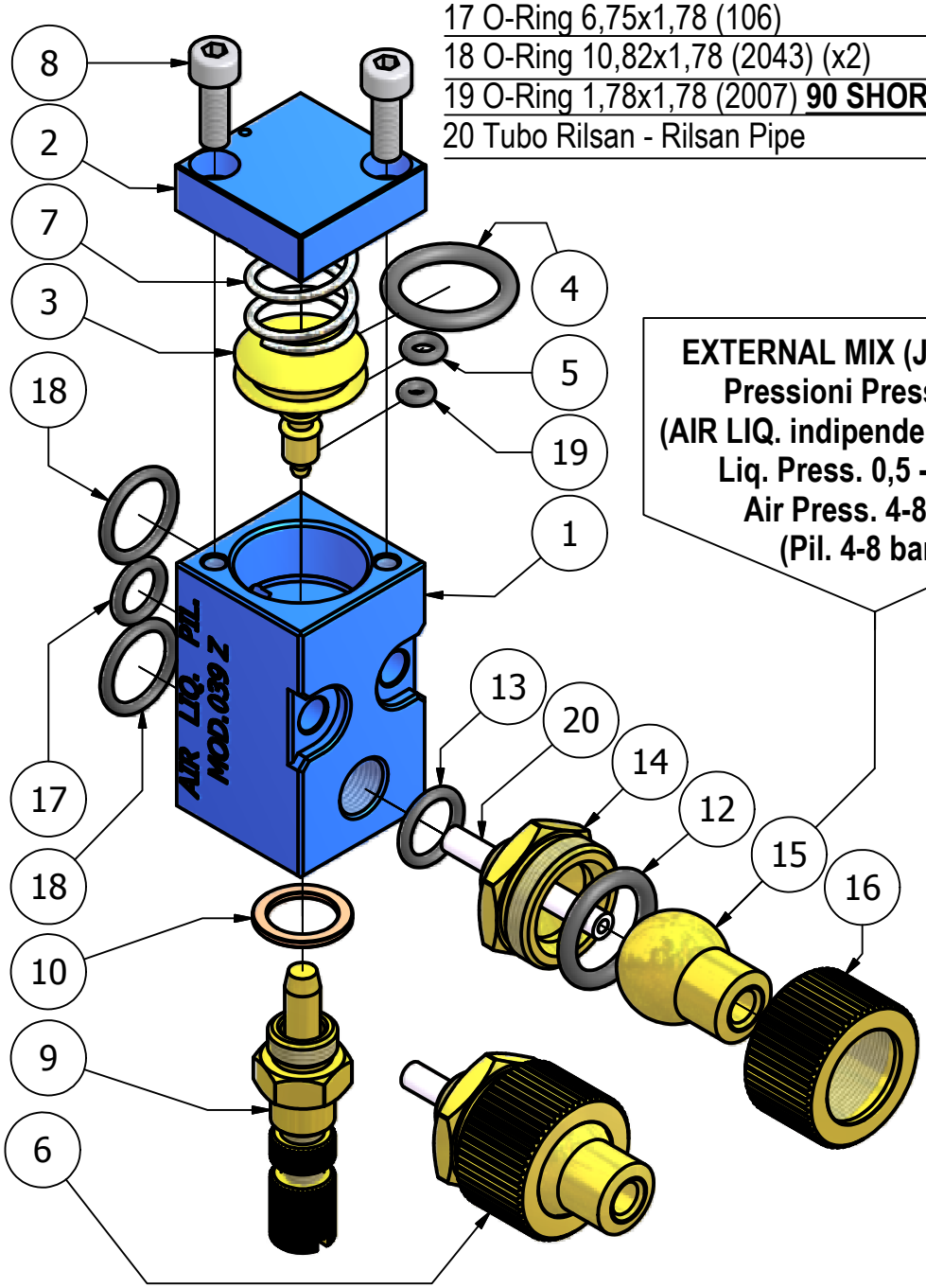

EXTERNAL MIX (JET MX4)
Pressioni Pressures
(AIR LIQ. indipendent setting)
Liq. Press. 0,5 - 1 bar
Air Press. 4-8 bar
(Pil. 4-8 bar)

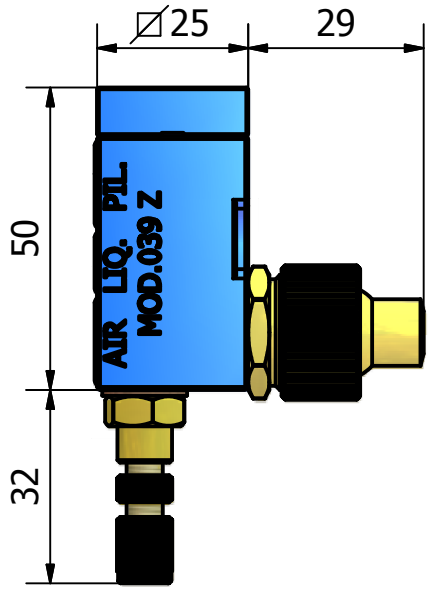

www.balossi.it - balossisrl@numerica.it

Balossi s.r.l. 25017 LONATO Bs Italy - tel.&Fax +39-030-9133007-9133017